WOOD CHIP BOILER

6 – 330 KW

HARGASSNER

BIOMASS HEATING TECHNOLOGY

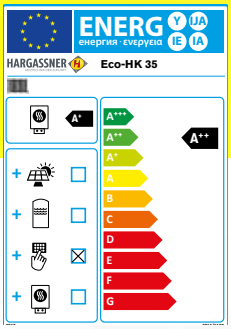

PLUS X AWARD®

2017 achieved for:

High Quality

Design

Functionality

hargassner.com

Our vision is harmony between satisfied customers and the environment

In order to lower emission values in oil or gas reliant countries, Hargassner is endeavouring to make high-performance biomass heating technology available to everyone. The company currently exports to more than 31 countries. The most important markets are Germany, France, Switzerland, Spain, Italy, Belgium, the Netherlands and the UK. However, Scandinavia, Ukraine, Czech Republic, Bulgaria, Greece, Slovenia, Hungary, Japan, New Zealand and North America are growing markets, which are trying to reduce their CO_2 emissions as well. At this time, export represents 70% of our annual turnover. Numerous awards confirm that our philosophy is more than just lip-service.

Markus, Elisabeth & Anton and Anton Hargassner

Multiple tested and confirmed

- More than 36 years of experience
- We export to 31 countries worldwide
- Company premises: more than 3,6 hectares
- More than 110,000 satisfied customers
- International successful

Dynamic, team spirit, closeness to nature, family and success are image elements that characterise Hargassner. And they are precisely the values people associate with the members of Austria's ski jumping team. Hargassner became an official partner of the ÖSV ski jumping team in September 2018.

PROUD PARTNER OF SKI AUSTRIA

CONTENT

4 – 5	General
6 – 7	Heating with Wood Chips
8 – 11	Overview Eco-HK
12	Eco-HK 20 – 60 kW
13	Eco-HK 70 – 120 kW
14	Eco-HK 130 – 220 kW
15	Eco-HK 250 – 330 kW
16 – 17	Lambda Touchtronic
18 – 19	Control Accessoires
20 – 21	Eco-Agitation
22 – 23	Transportation
24 – 25	Storage room arrangements
26 – 27	Refuelling systems
28 – 29	Heating modules
30 – 31	Accessories
32 – 35	Technical data

ECO HK
6 – 330 KW

20-60 KW

Especially suitable for:
- Residential complexes
- Agriculture

70-120 KW

Especially suitable for:
- Hotels / Gastronomy
- Public buildings

Recommended by our customers:

Family Pflug (Eco-HK 20):
„We have decided for a Hargassner Boiler, because we wanted to have the most efficient and also cost-saving heating system. Hargassner supplied an Eco-HK20 including Accumulator with 1.500 Liter. The picture shows the boiler room.“

Farmer Petutschnig (Eco-HK 50):
With the boiler, the whole farm is being heated as well as a neighbour-building through a distance line. An Accumulator with 1.500 Liter is being used. Filling of the storage is done directly with a chipper. So the customer can concentrate on his farm - while the boiler is working autonomously.

HARGASSNER
BIOMASS HEATING TECHNOLOGY

130-220 KW

Especially suitable for:
- Public buildings
- Industry and commerce

PLUS X AWARD
2017 achieved for:
High Quality
Design
Functionality

250-330 KW

Especially suitable for:
- Industry and commerce

Family Mooslechner (Eco-HK 90):
Family Mooslechner has decided to install a fully automatic Eco-HK 90 kW. The have decided earlier already, to heat eco-friendly - but now they switched to a wood-chip boiler to have more time for their guests. They are able to purchase their fule (approx. 150m^3) locally in the region.

Agritechnical supply Wölfleder (Eco-HK 100):
„For us, it was important to a have cheap heating solution. With the Eco-HK 100, we supply the whole company area including offices, Storage and Sales Area with heat. Hargassner is a guarantee for a smooth operation! We purchase also the fuel in our region - to ensure a local value-chain!“

What is the benefit of heating with Wood Chips?

For the production of Wood Chips, residual wood from domestic forests and wood from the sawmill industry is used. This wood waste material should ideally be stored for one year in breezy and sunny conditions. In autumn, the wood can be chipped and stored.

Farmers and forest owners use Wood Chips for their own heat production, or supply wood to local companies or public buildings.

Advantages for industrial companies and public facilities:

- Cost-efficient fuel with maximum comfort
- Increased energy security
- Independent from oil or gas
- Delivery through regional partners
- Value creation within the local economy
- Effective and energy-efficient heating system

Therefore Wood Chips are the most inexpensive fuel for heating systems compared to fossil fuels like electricity or heat pumps.

Advantages for farmers and forest owners:

- Use of residual wood
- Additional income through selling Wood Chips
- Minimal workload through automatic chip production
- Maximum workload reduction through a fully automatic heating system
- Effective and energy-efficient heating system

Wood Chip Characteristics

(ÖNORM 7133 / EN ISO 17225-4)

Wood Chips

Heating value: 4 kWh/kg bei 25% W
Weight: 200-250 kg/m³
Height: G30-G50 / P16 S-P31 S (Klasse A1-A2)
Water content: W20-W35 / M 20 (Klasse A1-A2)
Primary energy efforts: < 2,0%

Other types of fuel:

Wood Pellets

Pellets are made through compression of wood shavings in their natural state. Tons of wood waste is produced every day in regular wood-processing industries all over Europe.

Obvious advantages for pellets:

- Easy refuelling through blown pellet delivery
- Small storage volume

Miscanthus

For sustainable energy supply in the future, research is being undertaken into the combustion of new agricultural crops, such as miscanthus.

When using Miscanthus as a fuel for biomass boilers - emission-values are changing (compared to regular wood-chips). There are different regulations for heating Miscanthus in each country!

Advantages of Miscanthus:

- Enormous agricultural yields
- Little cultivation

Pellet Characteristics

(ÖNORM M 7135 / EN ISO 17225-2)

Heating value: 5 kWh/kg
Weight: 650 kg/m³
Ø / Lenght: 6 mm / ca. 5 - 40 mm
Water content: w < 10%
Primary energy efforts: 2-2,7%

Holzpellets

Miscanthus Characteristics

Heating value: ca. 4,5 kW/kg
Loose Weight: ca. 110kg
Briquettes Weight: ca. 560kg
Water content: ca. 14%
Harvest/ha: ca. 100–150 m³ SRM

Miscanthus loose

Miscanthus briquettes

The advantages that make the ECO HK unique

Hargassner - Latest state of the art for wood-chip-technology
Hargassner has long-term experience in biomass heating. This experience leads to the most advanced wood-chip heating technology.

Energy-saving ECO-Operation

Speed controlled EC-exhaust fan with negative pressure monitoring
Hargassner use energy-efficient EC-Exhaust fans for the Eco-HK. The main advantage of this Green-Tech EC-technology is the significantly higher efficiency rate of up to 90%. This saves electrical energy. The negative pressure box consistently monitors perfect pressure conditions in the combustion chamber. Based on these data parameters, the Touchtronic controls the speed of the exhaust fan and holds the negative pressure at an optimum value. This concept guarantees a perfect combustion with lowest emissions and highest efficiency.

Energy-saving Eco-RA
Due to the very low driving power and the highly efficient and robust spur gear, the agitator is very energy-efficient and reduces customers' bills. Savings of up to 67% may be reached compared to conventional agitator systems. Because of the impressive gear box efficiency of over 90%, the traditional worm gear drive has quickly been replaced.

Energy-saving Ignition
Due to the new design of the ignition element, the electrical power consumption has been reduced to just 300W, (a reduction of up to 1000 W) and at the same time the efficiency of the ignition process has been increased.

- **Electrical energy savings of more than 88%**
- **Intelligent ignition monitoring**
- **100 % Noise reduced**

Unique double rotary grate

ECO
friendly & efficient

Comfortable operation with different fuels
The grate consists of two consecutive and stepped grates which can move independently. As a result, Wood Chips and pellets, as well as other agricultural fuels, can be burned efficiently..

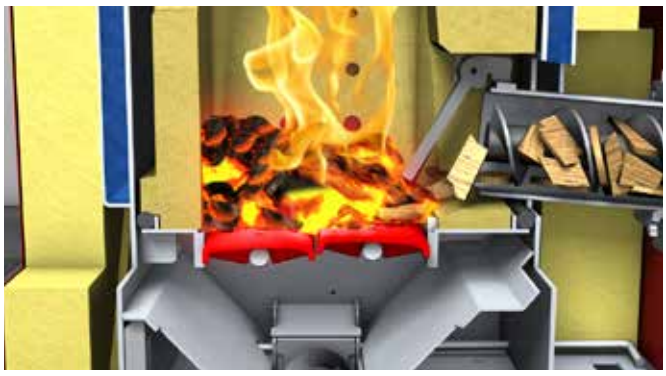

During combustion the **grates are moved accurately** to ensure a homogeneous firebed

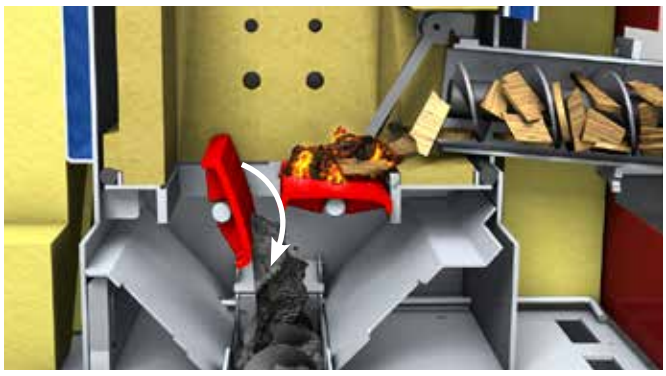

If regular Wood Chips are used, only the **rear de-ash grate** opens. The ash falls down and the embers remain.

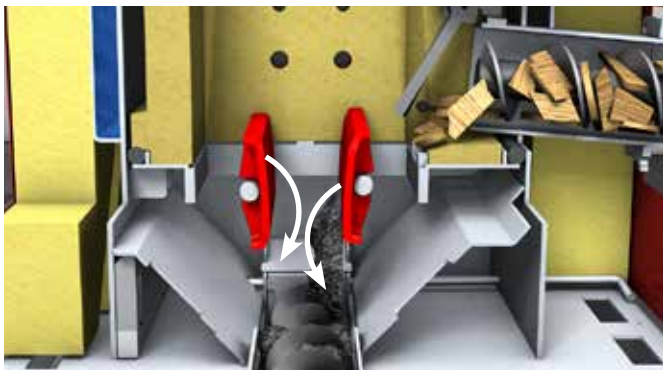

If the boiler is completely cold a full cleaning process is executed prior to start. **Both grates open**, the cold ash and all foreign objects like stones, nails, etc, fall down.

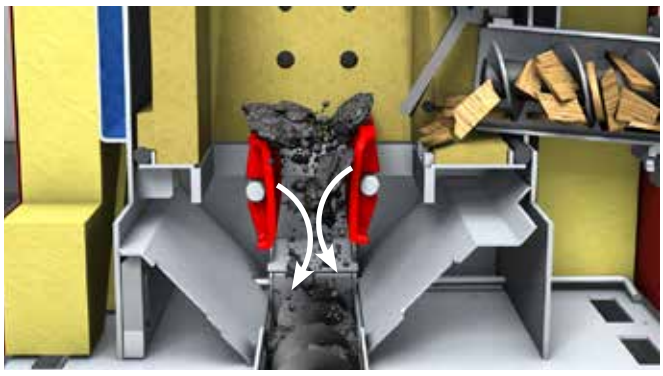

For **miscanthus** etc, the **„Breaker Function“** of the grate forces clinker down into the ash auger.

The ECO HK – ECO friendly heating technology

Firebed monitoring & Lambda sensor

Guarantee for lowest emissions

Through an exact and **contact-free firebed-height monitoring system** with sensors, the most effective combustion conditions (dependent on fuel quality) is detected. Your heating system is always working with the required heat output at optimum combustion values.

It doesn‘t matter which fuel type is stored - Wood Chips soft, hard, dry or damp - the control unit uses the lambda sensor to detect the relevant calorific value and regulates the optimum fuel air mixture. This is how convenient controls work today - constant manual adjustment of the system to the fuel is a thing of the past.

Fully refractory-lined high performance combustion chamber with integrated back end protection

The refractory combustion chamber guarantees high combustion temperatures through optimum heat storage (also at part-load), which minimises the ignition procedure and reduces emissions.

To reduce **ash-clinkering** of very dry fuel ECO-HK each has installed a flue-gas recirculation. Ash can be disposed easily and completely automatically.

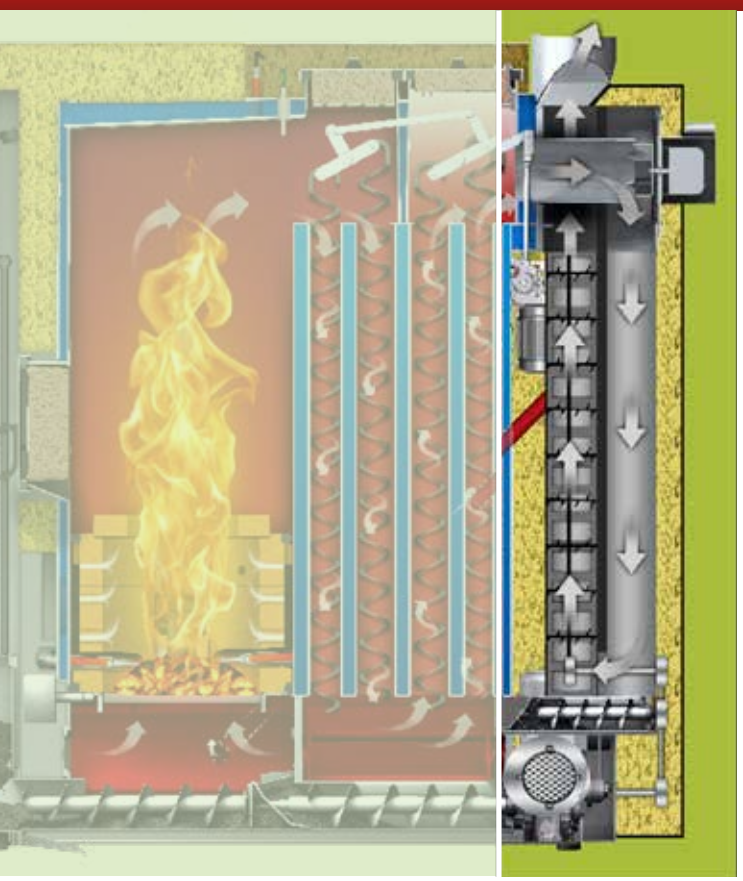

PARTICLE SEPARATOR
70 – 220 eCLEANER

The optionally available particle separator **eCleaner** can be ordered with the boiler and it can also be retrofitted at any time. With this particle separator, fine dust emissions are considerably reduced depending on the type of fuel.

In the **eCleaner** particles are being charged electrostatic, which are then deposited on the walls and fall down through the automatic cleaning device. A ash auger transports them into the common ash box.

NEW FOR:
ECO-HK / PK 130 – 220 kW!

Your Advantages:

- Small space requirement
- Reduces fine dust to a minimum
- Automatic cleaning and transport into the ashbox
- Optional - can be retrofitted anytime

Perfect cleaning - increased efficiency!

A new developed cleaning concept is cleaning **ALL Heat-Exchanger pipes** regularly. NEW - also the first pipe! The sharp edges of the turbulators help to get rid of fly-ash directly through the ash-auger.
Our new developed de-ashing system is cleaning the boiler regularly. Only **ONE** ash-auger (patent pending) transports fly-ash as well as normal ash from combustion into the **fully-integrated ashbox**. The ash is being shrinked and compressed on the way to the ashbox. Maximum cleaning comfort and highest efficiency are the result!

Integrated Touch Control

The all new Lambda Touchtronic leaves nothing to be desired. The control system is characterised through its exceptional design and simple handling. Navigation is very sophisticated. You are able to recognise visually immediately the current status of the boiler, the accumulator and the HWS as well as all heating circuits. New optimised accumulator control with 3 sensors. New remote controls with LCD or Touch displays make it even easier to use.

Advantages:

- Intuitive Touch Control
- Efficient Combustion Control
- Automatical Adaption on Weather-Changings
- Many Remote Control Possibilities (also via APP)
- Connection to Various SmartHome Solutions possible.

ECO HK
20-60 kW

Hargassner – latest Wood Chip heating technology for small-scale applications. Especially designed for agriculture and residential complexes.

- Cost-effective due to **eco-mode**
- New grate system: **double rotary grate**
- **Firebed level control** with Lambda sensor and automatic fuel quality detection
- New Eco-extraction, **energy saving** through 0.18 kW-Motor
- Latest combustion technology Eco-Control **for minimal dust emissions**
- Bicameral **rotary valve in Z-form** for 100% burn back-protection
- Patented ash extraction system for fly- & grate ash
- Reciculation included as standard

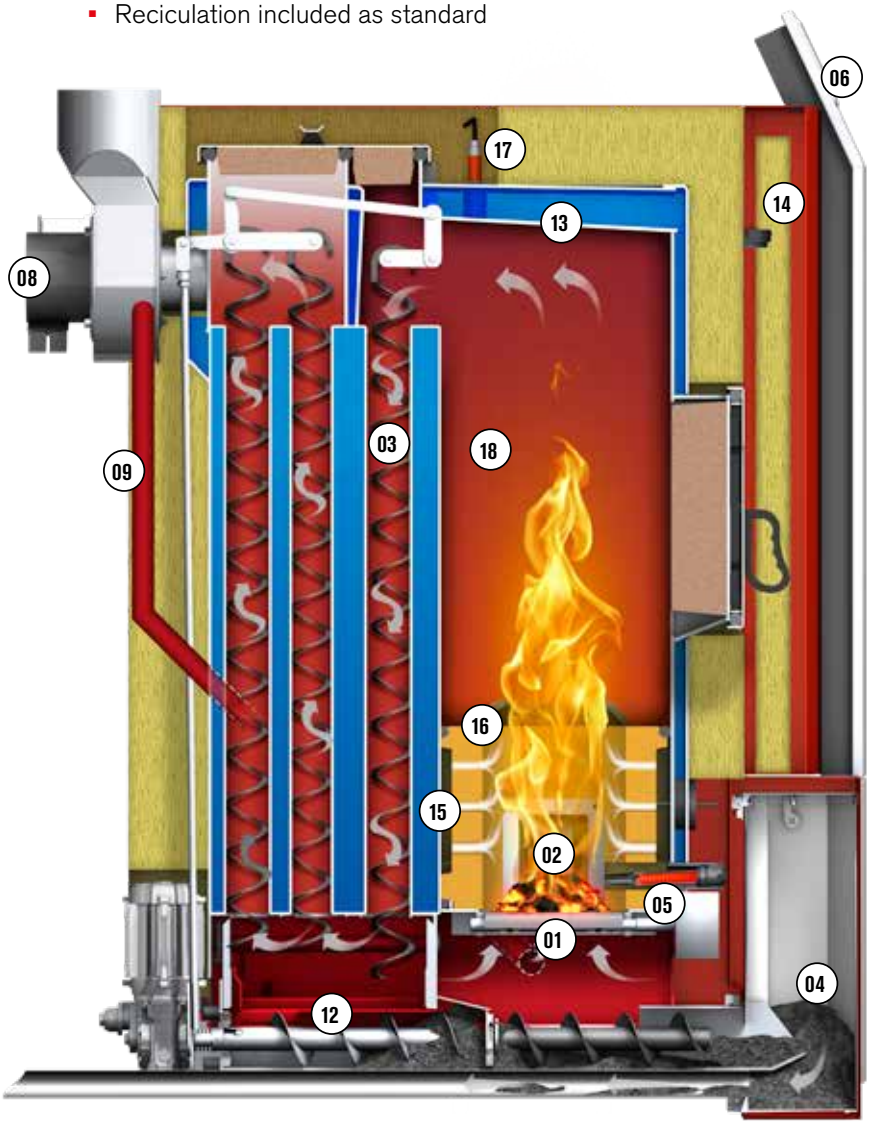

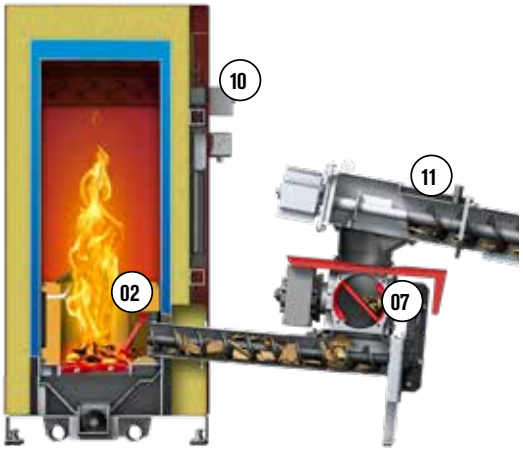

01 New grate system „Double-rotary grate“
02 Firebed levelling
03 Heat exchanger cleaning (also in the first pass)
04 Optional: Ash suction system for longer maintenance intervals
05 New ignition: 300 W, without fan
06 Innovative integrated Touch-control
07 Bicameral rotary valve in Z-design
08 Exhaust fan (EC-motor) with negative pressure monitoring
09 Recirculation included as standard
10 Optional: Integrated back end protection
11 Eco-RA - Energy-efficient agitator system
12 Patented ash extraction for fly and grate ash
13 No thermal discharge safety device necessary
14 Negative pressure monitoring
15 Water-cooled combustion chamber
16 Flame concentration jets out of high-end steel cast
17 Lambda sensor
18 Emergency operation with wood logs possible

ECO HK
70-120 kW

Hargassner – latest Wood Chip heating technology for medium-scale applications. Especially designed for hotels / gastronomie and public buildings.

- Cost-effective due to **eco-mode**
- New grate system: **double rotary grate**
- New Eco-extraction, **energy saving** through 0.18 kW-Motor
- Latest combustion technology Eco-Control **for minimal dust emissions**
- **Firebed level control** with Lambda sensor and automatic fuel quality detection
- Bicameral **rotary valve in Z-form** for 100% burn back-protection
- Patented ash extraction system for fly- & grate ash
- Reciculation included as standard

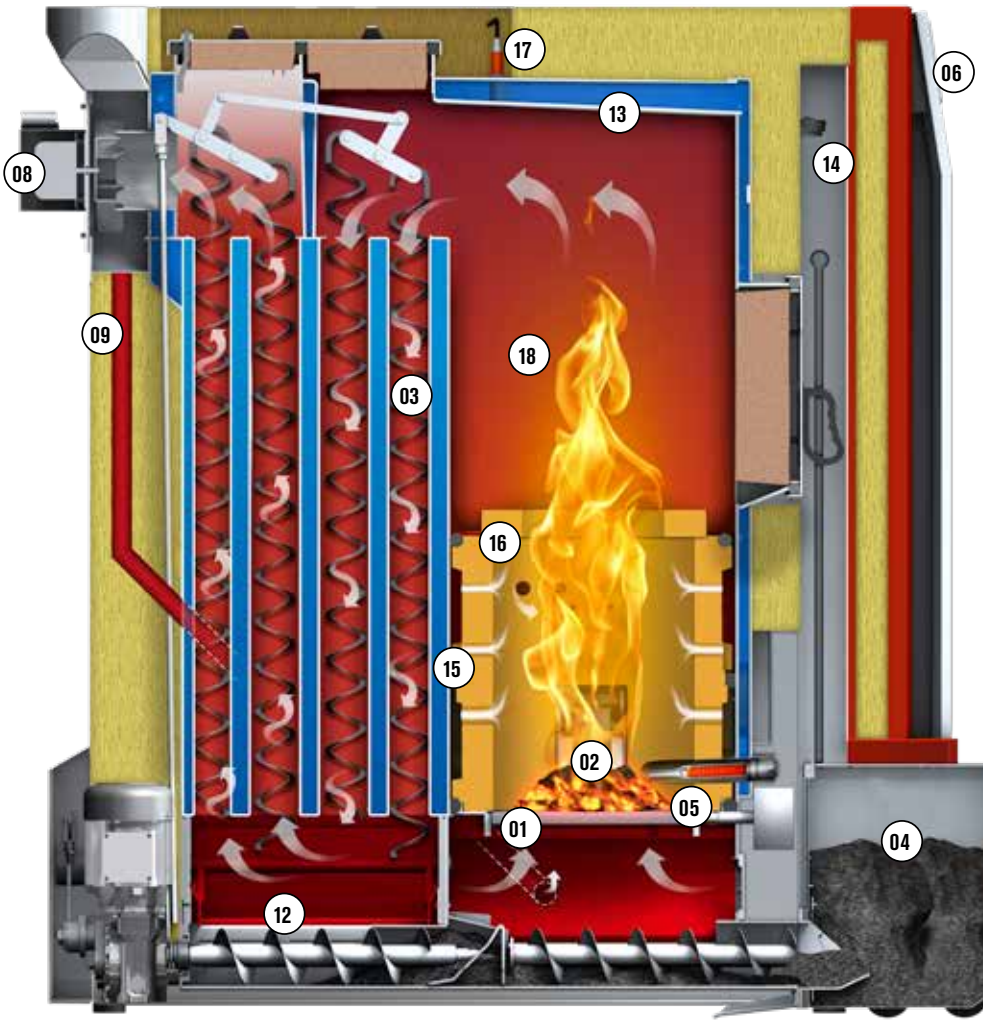

01 New grate system „Double-rotary grate“
02 Firebed levelling
03 Heat exchanger cleaning (also in the first pass)
04 Optional: Ash suction system for longer maintenance intervals
05 New ignition: 300 W, without fan
06 Innovative integrated Touch-control
07 Bicameral rotary valve in Z-design
08 Exhaust fan (EC-motor) with negative pressure monitoring
09 Recirculation included as standard
10 Optional: Integrated back end protection
11 Eco-RA - Energy-efficient agitator system
12 Patented ash extraction for fly and grate ash
13 No thermal discharge safety device necessary
14 Negative pressure monitoring
15 Water-cooled combustion chamber
16 Flame concentration jets out of high-end steel cast
17 Lambda sensor
18 Emergency operation with wood logs possible

ECO HK
130-220 kW

Hargassner – latest Wood Chip heating technology for large-scale applications. Especially designed for public buildings, industry, commercial enterprises and district heating.

- Cost-effective due to **eco-mode**
- New grate system: **double rotary grate**
- New Eco-extraction, **energy saving** through 0.37 / 0.55 kW-Motor
- Latest combustion technology Eco-Control **for minimal dust emissions**
- Firebed level control with Lambda sensor and automatic fuel quality detection
- Bicameral **rotary valve in Z-form** for 100% burn back-protection
- Patented ash extraction system for fly- & grate ash
- Flame temperature control & one secondary air set motor

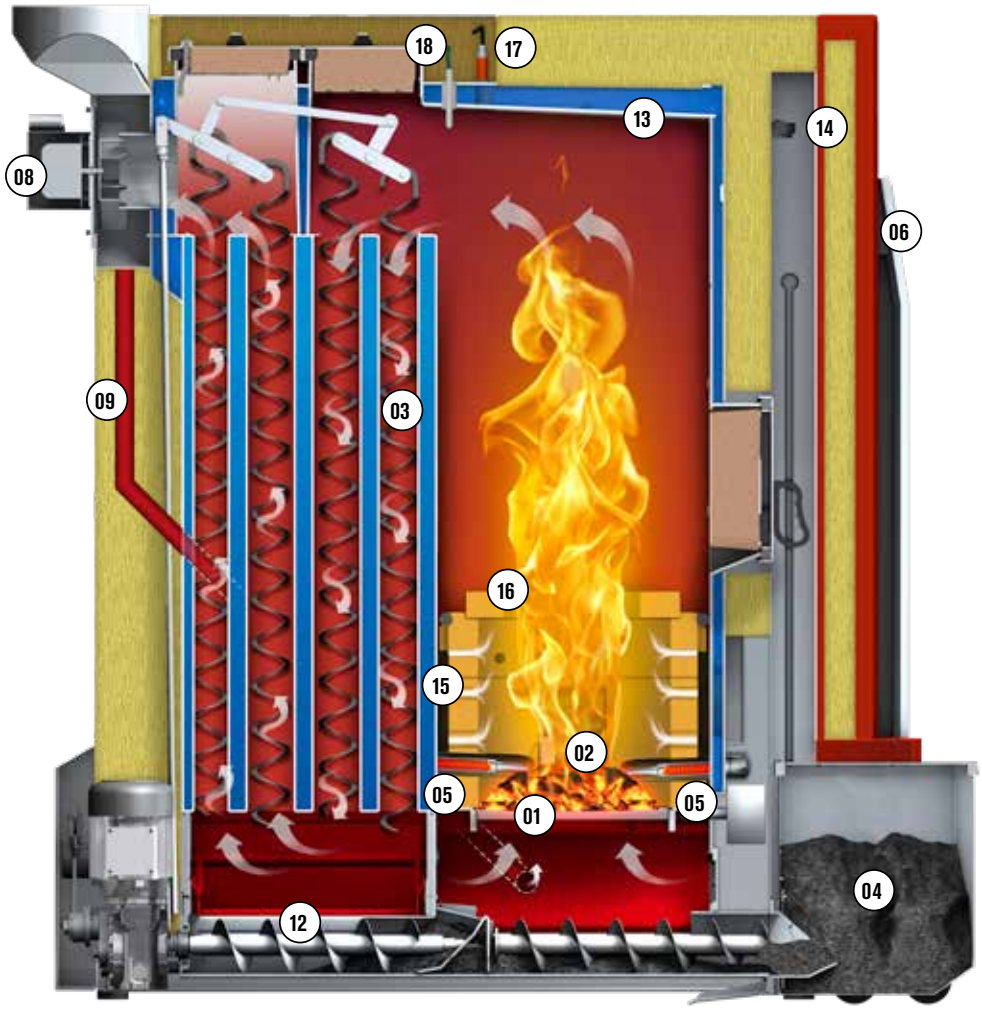

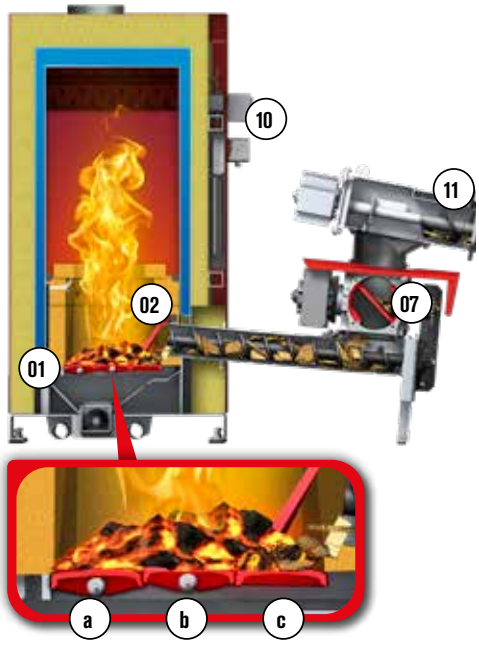

01 New double rotary grate a) De-ash grate b) Stoker grate c) Fixed grate
02 Firebed levelling
03 Heat exchanger cleaning (also in 1. draught)
04 Large ash box (75 l)
05 New ignition: 2 x 300 W, without fan
06 Innovative integrated Touch-control
07 Bicameral-rotary valve in Z-shape (22cm)
08 Exhaust fan (EC-motor) with negative pressure monitoring
09 Flue gas recirculation - **standard**
10 Optional: Integrated back end protection
11 Eco-RA – Energy-efficient agitator system
12 Patented ash extraction for fly- and grate ash
13 No thermal discharge safety device necessary
14 Negative pressure monitoring
15 Fully refractory-lined combustion chamber
16 Flame concentration jets out of high-end refractory
17 Lambda sensor
18 Flame temperature monitoring

ECO HK
250-330 kW

Hargassner – latest Wood Chip heating technology for large-scale applications. Especially designed for industrie and commerce.

- Cost-effective due to **eco-mode**
- New grate system: **double rotary grate**
- New Eco-extraction, **energy saving** through 0.55 kW-Motor
- Latest combustion technology Eco-Control **for minimal dust emissions**
- Firebed level control with Lambda sensor and automatic fuel quality detection
- Bicameral **rotary valve in Z-form** for 100% burn back-protection
- Permanent Power – no burnout before de-ashing
- Patented ash extraction system for fly- & grate ash
- Flame and Crate-temperaturemonitoring & secondary air-flap

with Cascadecontrol - up to 6 boilers and 2 MW possible!

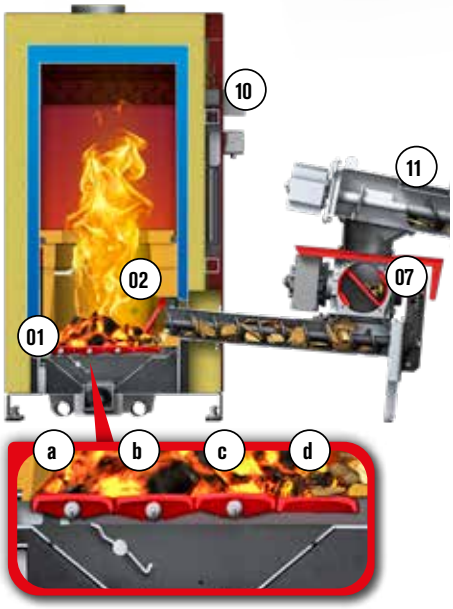

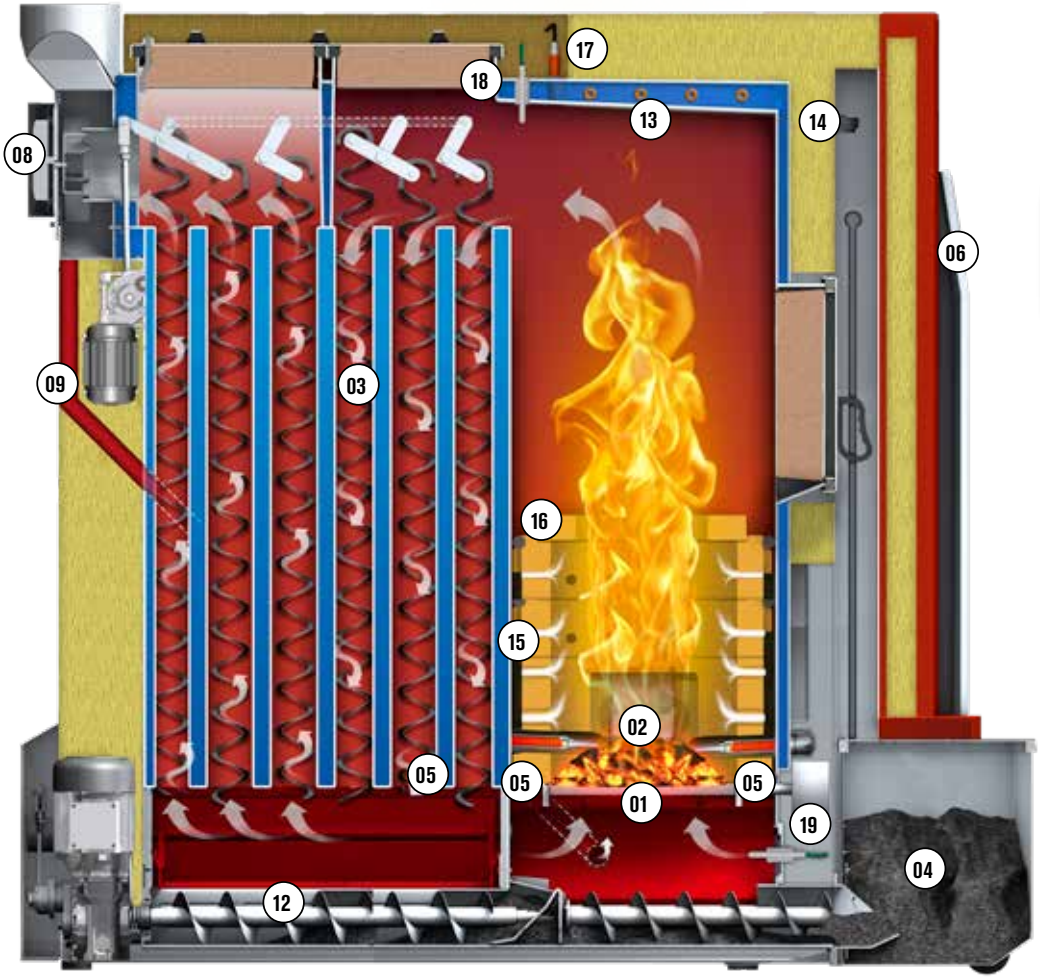

01 New double rotary grate a) De-ash grate b) Stoker grate c) Fixed grate
02 Firebed levelling
03 Heat exchanger cleaning (also in 1. draught)
04 Large ash box (75 l); Ash-Extracing 300 Liter ash-bin optional
05 New ignition: 2 x 300 W, without fan
06 Innovative integrated Touch-control
07 Bicameral-rotary valve in Z-shape (22cm)
08 Exhaust fan (EC-motor) with negative pressure monitoring
09 Flue gas recirculation - **standard**
10 Optional: Integrated back end protection
11 Eco-RA – Energy-efficient agitator system
12 Patented ash extraction for fly- and grate ash
13 No thermal discharge safety device necessary
14 Negative pressure monitoring
15 Fully refractory-lined combustion chamber
16 Flame concentration jets out of high-end refractory
17 Lambda sensor
18 Flame temperature monitoring
19 Crate-Temperature monitoring

Sit back and relax – your heating system is doing the work for you

The Lambda-Touchtronic has a userfriendly touch screen. The system controls the complete combustion process, the back end protection and the loading of the accumulator. Furthermore, all heating circuits and hot water circuits may be regulated. The control works according to external conditions, recognising the changes in conditions as soon as they occur and adjusting the boiler output accordingly. Maximum comfort guaranteed!

Hot water tank

It is only necessary to set the desired hot water tank temperature and charging time. Your control unit will take care of the remaining steps automatically.

Hargassner guarantees 24 hours hot-domestic-water. Beside of regular loading schedules of the Hot Water Tank, a **„minimum-boiler-loading“** ensures the supply of your hot domestic water needs.

Further advantage is the HWT priority control. Means, if a HWT is being loaded, it is ensured that heating-circuits are not reduced permanently and room temperature would cool down.

Lay back and enjoy your warm home.

Control of the heating circuits

The Lambda-Touchtronic may control several independent heating circuits. The client is able to define different settings in detail; e.g. indoor room temperature on all heating circuits, depending on time of day and outside temperature.

Hargassner's 3G day/night reduction mode enables the client to set 3 thresholds. One mode for 'Heating during the day', one for 'Reduction during the day' and one for 'Reduction during the night'. As a result, the heating system only operates if necessary. This saves energy without sacrificing comfort.

Through the ingenious residual heat use programme, the remaining energy in the boiler is used efficiently after the shutdown of the boiler.

Boiler before starting: Display of Lambda Touchtronic shows a not-heated boiler. HWT and Accumulator are cold - not loaded

Boiler in Full-Load: Display shows a working boiler. HWT and Accumulator are being loaded already. Heating Circuits ensure required temperature in each living-area.

Boiler in Part-Load: Boiler is only working with half-power. Boiler and Accumulator are loaded already. Heating Circuits ensure required temperature in each living-area.

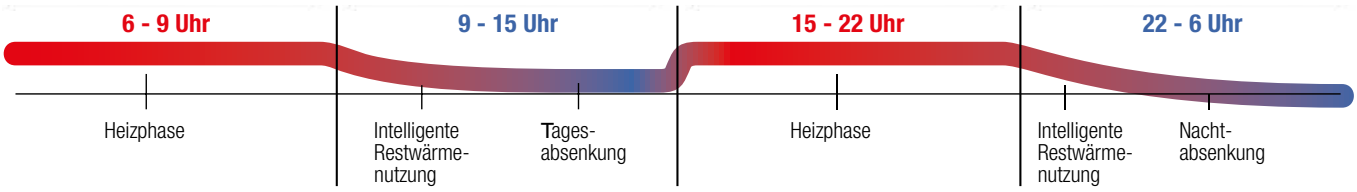

Heating time 1:
6 a.m. – 9 a.m.
Outside it is -7°C, so considerably less than the threshold value of +16°C - the heating switches on.

Day-reduced temperature:
9 a.m. – 3 p.m.
Outside temperature increases to -1°C considerably less than the day time reduced temperature threshold of +8°C. Heating day-reduced temperature operation.

Heating time 2:
3 p.m. – 10 p.m.
The outside temperature climbs to +1°C; so considerably less than the threshold value of +16°C. The heating remains switched on.

Night-reduced temperature:
10 p.m. - 6 a.m.
The temperature cools to -2°C, so above the threshold value for the night-reduced temperature of -5°C. The heating switches off.

CONTROL ACCESSORIES

The mobile remote control for your heating system!

You want to change a setting on your boiler or see the current status - without going to your boiler room? No problem! The all new remote controls. Easy, self-explaining and perfectly visualised!

LCD FR35 Backlight: With this LCD-remote control you can see all important temperatures on a digital screen. You can set the room temperature and/or day-reduced or heating operation. The FR35 can be connected with or without room-temperature dependence. A warning light is integrated to inform the client about the status of the heating system.

Wireless version for LCD FR35: Same function as described above - but radio version with transmitter and receiver.

FR 40 Touch remote control: All functions of the boiler are controllable through the living room You can set the room temperature and the heating statuses, you can change all heating temperatures and times.

Analog FR25: you can use the temperature controller to adjust the room temperature up or down. With or without room-temperature dependence. A warning light is integrated to inform the client about the status of the heating system.

Touch accessories

Hargassner offer a wide range of Touch accessories. This contains the extension of heat circuits and furthermore remote controls to increase customer convenience.

NEW:
Control board B

Control board A/B: This control board is to extend the control by 1 heat circuit and 1 HWT. The board may be integrated in the boiler or the extension module HKM. Also in the HKR - additional control boards can be installed. (Sensors must be ordered separately.)

Control board F: mixed district line, Control of the district line pump and the distr. line mixer incl. sensor

Control board PF: for 2 additional sensor inputs. All together you can connect 5 sensors on the buffer now. (Sensors must be ordered separately.)

Control board D: for differential control of a separate heat source and one accumulator or hot water tank. This differential controller can be used for an external boiler (Log, Oil, Gas, etc.) as well as for a solar system in single circuit or double circuit operation. The control of the pumps is constant (no speed control with PWM). Incl. 1 HWT-sensor and 1 Solar sensor (temp. resistant)

Control board E: for controlling a substation flushing valve (no sensors required).

Extension module HKM (with or without Touch Display): This module is used for the extension of additional heating- or hot water tank circuits. A maximum of 2 mixer-controlled heat circuits & 1 HWT with DHW-circulation pump can be connected to the boiler. Additionally an external heat circuit or an accumulator and other HKM's can be connected.

Heat circuit controller HKR with Touch Display: Control unit based on atmospheric conditions for 2 mixing valve controlled heating- and 1 hot water tank circuits with DHW-circulation pump; 1 accumulator or external boiler, 1 external HC, 1 long-distance heating or accumulator pump, extension to a max. of 16 HKR's. An extension with a max. of 2 HKM's, ZSP-A allows additional 8 HC and 5 HWT circuits.

Overvoltage protection:
If the CAN-Bus modules are in two different buildings - the overvoltage protection guarantees a potential equalisation.

Housing with/without main switch:
If no space is available in the boiler control cabinet when using several additional boards, then a universal expansion module can be used. Housings are available either with and without main switch or with a housing + main switch + three-phase current board.

Additional functions

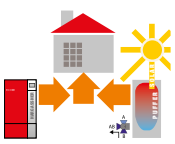

Accumulator- & Solar logic(standard):
The PSP-Logic with 3 SENSORS and part load control revolutionizes the current accumulator control. This guarantees long boiler run times, less start-up cycles and maximum boiler efficiency. For peak loads a forced loading cycle can be activated. Solar buffer logic: First the hot water stored in the tank from solar-energy is used, before the biomass boiler fires up using automatic ignition.

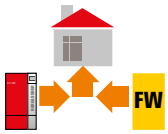

External heat control:
If desired, an additional external boiler, e.g. Pellet, oil or gas boiler, may be integrated. Changeover between the two boilers occurs fully automatically.

Cascade control:
The cascade controller for 2-6 boilers enables a parallel operation of several boilers. This controller automatically switch on or change over control of boilers, based on outside temperature. Priority mode, equality of operation hours possible, auto change-over mode after error. New: control of an external peak-load or back-up boiler.

Remote control via Phone or Tablet

Internet-Gateway: required for App and Web-Service. The internet gateway establishes a save TLS-encrypted connection between the Hargassner boiler control to the Internet router. Only with that a save access to your heating system is possible.

Web solution: With the Hargassner Web-Service the installer may set the heating system ONLINE - via Login. (Requirement: Internet gateway)

App: With the all new Hargassner APP you may easily change heating times, temperatures and operation modes and receive information regarding the current boiler status. Important information can be sent via email or push notification to your mobile. You know at any time the status of your boiler. (Requirements: Internet - Gateway; Smart phone with Android or IOS)

SmartHome Solutions

Hargassner offers interfaces for all main smart home solutions. Efficient energy control and heat distribution in your house is now at a new level. SmartHome compatibility is the perfect opportunity for an even more efficient energy control. Save energy and costs. Enjoy convenience and safety. Electrical devices, heating and lights are connected to one central control unit. Via internet you are able to look at your home - also if you are on the way!

LOXONE: Integrate your Hargassner boiler to your Loxone SmartHome. Appropriate boiler control based on Loxone singe room control. Loxone enables the configuration and control of each single room - according to your demand.

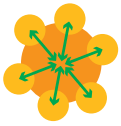

Mod Bus: With the MOD-BUS interface /TCP the boiler can be integrated into a building management system or can be connected to a visualisation software.

KNX: Connection to a KNX-house automation. Interface between boiler (LAN) and KNX-Bus -> Bus coupler.

Heat meter: with M-Bus interface. Connection of heat meter 403 from Kamstrup to the Hargassner Touch-Tronic. This allows you to read out your heat data conveniently on the boiler or via WEB.

EFFICIENT ROOM AGITATOR

Energy efficient & cost saving

01 Z-shaped bicameral rotary valve

- The Z-shaped rotary valve is designed specially for Wood Chip
- Depth of chamber 18 cm for extra long wood pieces
- 100% burn-back safety
- simple replacement
- little effort
- with hardened cutting edges

removable covers

04 Modular system

- Planning flexibilty
- Auger extension from 400 to 2000 mm
- Easy transport and assembly
- Faster and cost-effective maintenance
- Exchange of single auger parts possible

02 Ball coupling

- flexible tilt and rotation angle
- max flexibility for planning and installation

03 Breaker box

- forces long or bulky Wood Chips downwards
- increased operational safety
- **special safety switch**

05 Special spring blade layout

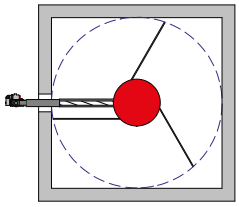

- up to Ø 4m = 3 blade system
- power-saving gear ratio 1:16

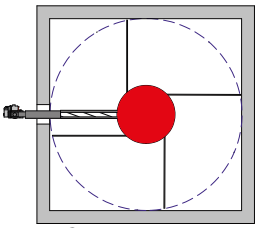

- Ø 4.5 to 5 m = 4 blade system
- power-saving gear ratio 1:25

Unique advantages at a glance

Due to the very low driving power of just 0.18 kW (70–330 kW: 0.25–0.55 kW) and the highly efficient and robust spur gear, the ECO-RA agitator is very energy-efficient and reduces the customer's energy costs. Savings of up to 67% may be reached compared to conventional agitator systems. This impressive gear box with an efficiency of over 90%, has replaced the traditional worm gear. The modular design ensures easy handling of the auger, trough and removable covers.

Lowest energy consumption

Up to 67 % energy savings

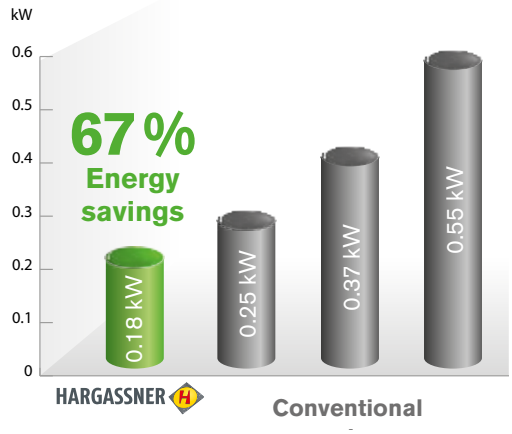

No slant construction needed!
- Impurity separation
- Cost saving

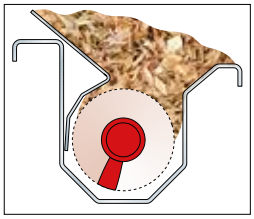

06 New Wood Chip inlet blade
- optimum material supply
- more material in the auger shaft
- efficient storage room emptying
- less force needed
- less wear and tear

PATENTED

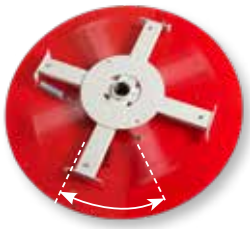

08 Patented no load disc
- disc remains unmoved until springs are under the disc
- half effort
- no hollow

PATENTED

RA 450 and RA 500

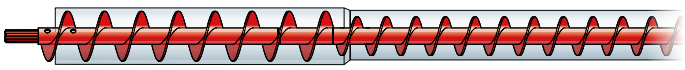

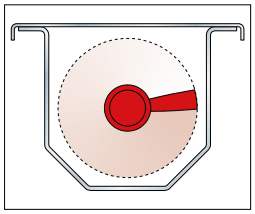

07 New conveying shaft and auger
- generous dimensions
- no stagnation of material
- suitable for Wood Chips G50
- progressive tapered extraction auger
- shaft profile gets largerschachts

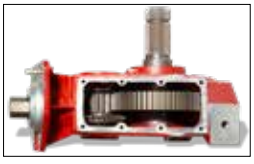

Robust spur gear with efficient 1:16 or 1:25 transmission

09 Eco-RA extraction system
- extremely robust
- durable
- failsafe
- maintenance-free

Solid construction
- extremely robust
- durable
- failsafe
- maintenance-free

Gear box comparison:

Worm gear
- friction loss
- low efficiency

Spur gear
- low friction loss
- high efficiency

Hargassner Wood Chip Transportation and Storage Systems

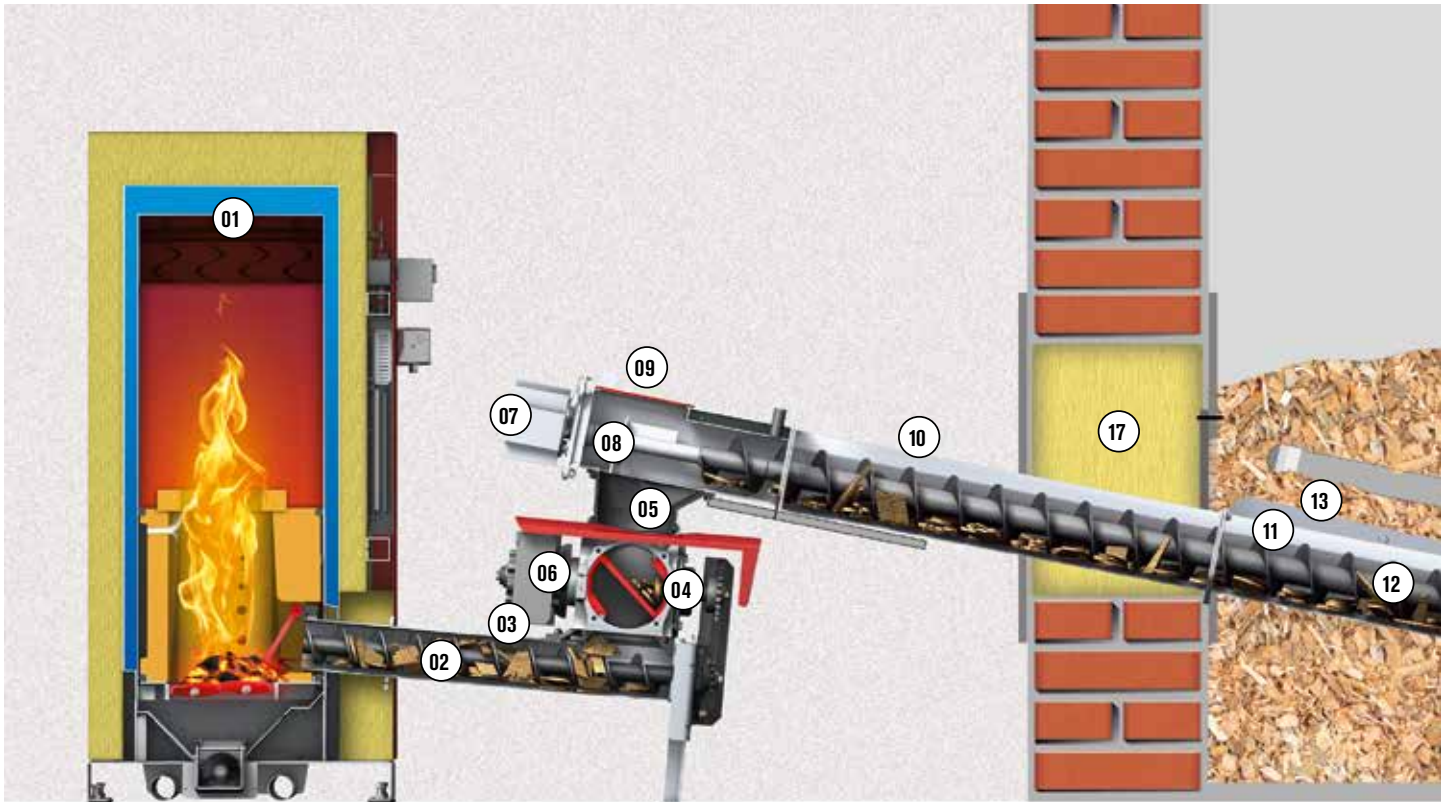

Heating room and storage room in an auxiliary building
The refuelling of the storage room occurs directly from the chipper or from a tractor with front-loader

Heating room and storage room in the basement of the residential building
The refuelling of the storage room occurs through Hargassner's horizontal filling auger on the ceiling with external shaft.

The “Special” Solution

Boiler room and fuel storage room in one container

The refuelling occurs through Hargassner’s vertical filling system including auger trough and Wood Chip ejector.

The Hargassner Eco-Agitator

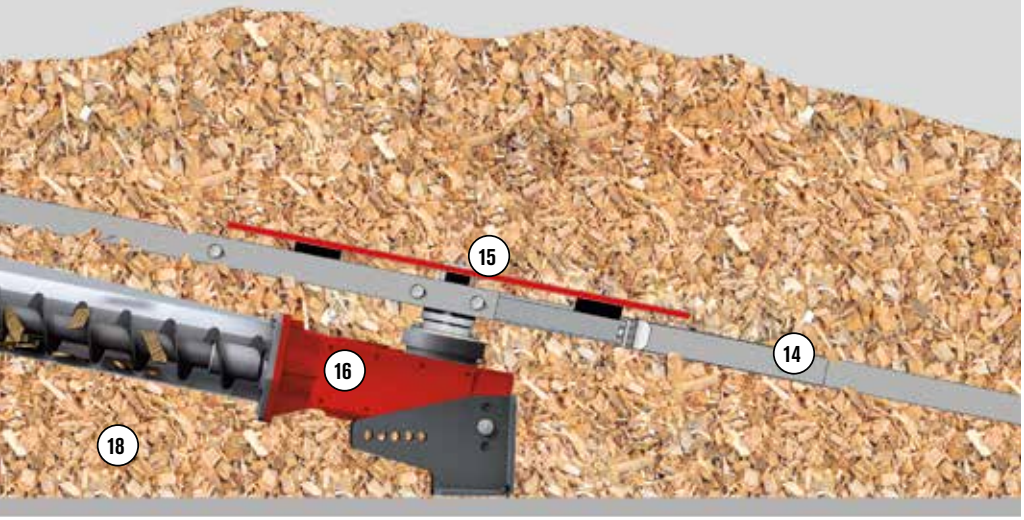

01 Boiler
02 Stoker auger
03 Stoker auger - temperatur monitoring ETÜ
04 Z-shaped bicameral rotary valve
05 Ball coupling
06 Stoker motor, auger and rotary valve
07 Room agitator with motor and extraction auger
08 Breaker box
09 Safety lid with auger reverse function
10 Modular RA extensions
11 Fuel storage temperature monitoring TÜB
12 Extraction auger
13 Auger plate for constant fuel transport
14 Patented spring agitator system with no-load disc
15 Patented no-load disc
16 Eco-RA extraction system
17 Storage room service door
18 No sloping floor required

Heating room on ground floor, storage room on 1st floor

The refuelling occurs through Hargassner’s vertical filling system including auger trough and Wood Chip ejector. The chips fall via a elongated drop shaft into the stoker auger.

District heating service

Independent building for heating room and storage room. Storage room is recessed on basement level for easy refuelling.

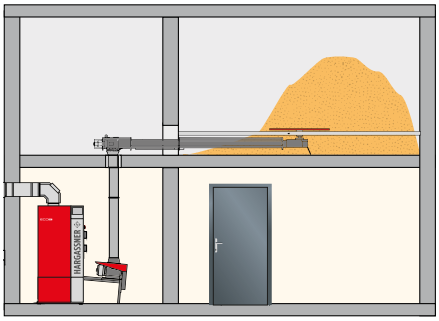

Downpipe Ø 150 & 180 for agitator:

The storage room is on the 1. floor and the heating system at ground level? No problem! Hargassner offers, a newly developed, modular down pipe system. A down pipe is installed between the agitator system and the stoker auger. This system consists out of a basic module and different extension tubes with 100, 200, 500 and 1,000 mm length. For the exact length adjustment an extendable tube from 30-400 mm is available. For a lateral mismatch - 2 bows with 30° are used. The fixation is made by clamping rings. For boilers Eco-HK 20–120 kW the diameter Ø 150 mm is used and for Eco-HK 150–330 kW Ø 180 mm.

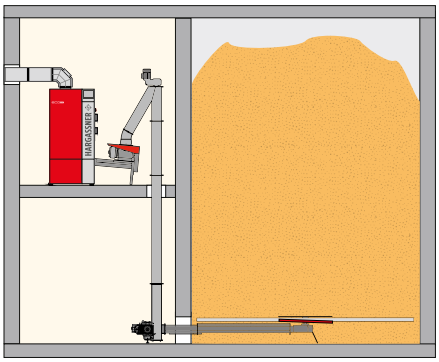

Vertical connection auger:

If the storage room is one floor below the heating system, then a modular vertical connection auger can be used. A vertical auger is installed between the agitator system and the stoker auger. This system consists out of a basic module and different extension tubes with 500 and 1,000 mm length. An extendable tube, adjustable from 30-400 mm, is integrated to adjust the exact length of the downpipe. For a lateral offset, the mounting flange is infinitely variable.

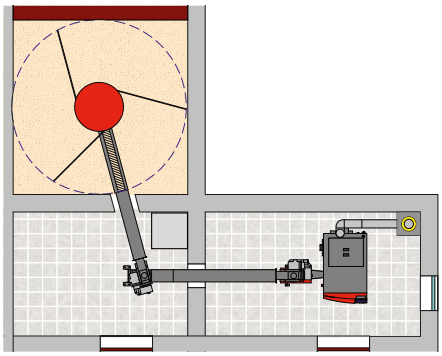

Connection auger for agitator:

If no direct connection is possible between agitator system and stoker auger - a connection auger is used. Includes a motor and a 1m basic module. Extensions see the regular RA.

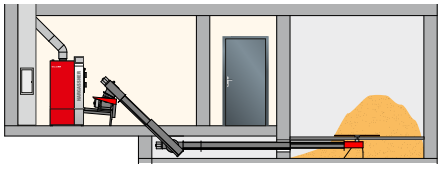

Ascending auger for room agitator:

This auger is used to have a countersunk connection between the agitator and the stoker auger. (E.g. under walkways, etc.) Includes a motor and a 1m basic module. Extensions see RA.

MULTIPLE BOILER PLANTS

Further versions possible on request!

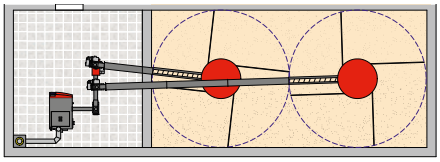

Two agitator systems for one boiler:

This system is designed for rectangular storage rooms. It increases the storage volume and the coverage. The system switches automatically between the agitators.

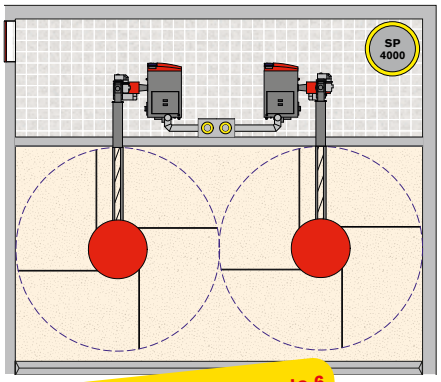

with Cascadecontrol - up to 6 boilers and 2 MW possible!

Cascade control for multiple boiler systems:

This system is especially designed for medium- and larger heating outputs. Due to the exact modulation of multi-boiler systems (max. 6), the heating output can be adapted to the particular heat demand. (Only the heat which is required, is produced) Additionally a back-up is provided and the fuel storage volume is increased. A perfect price-performance ratio!

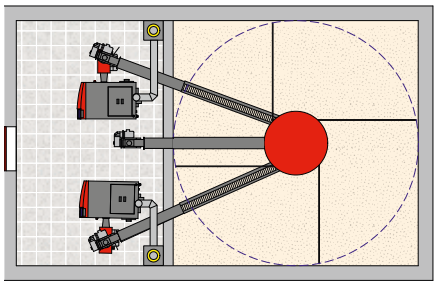

Two boilers with one agitator:

The agitator comes with a closed shaft and is powered by a separate motor. 2 separated connection augers with open shaft supply the two boilers.

Both boilers are controlled by the cascade controller

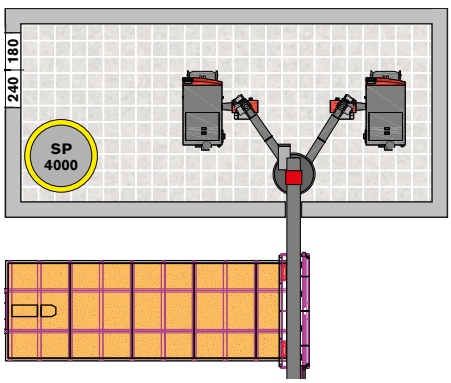

Distribution box for multiple boiler systems:

This box is used for 2, 3 or 4 Hargassner boilers or an external extraction system like: Silo extraction, walking floor solutions, etc. This is a round box with motor, adjustable feet and up to 4 extraction openings. To be complemented with a connection auger unit and different extensions. This box can be equipped with a cover frame.

Automatic filling system for woodships with through and vertical auger

With the newly developed vertical refill system for Wood Chips, difficult to access room can be easily refuelled. For instance, storage rooms in upper floors without appropriate access roads, or containers, can be handled very easily. The refill trough is available in two different formats: 2.10 m and 2.80 m in length, either with or without suitable transportation wheels. Depending on the situation on-site, it is also possible to sink the trough into the ground floor. Additionally, Hargassner offers a special framework and rain protection cover for trouble-free opening and unloading of the chips from a trailer. The vertical filling system can handle heights up to 8m and uses a specially constructed ejecting system including an adjustable metal sheet cover (yellow) to ensure best distribution in the storage room. Output: 50m³/h; depending on Wood Chip quality.

Spread pattern depending on Wood Chip size: the Wood Chips. The larger or heavier the Wood Chip pieces, the more intensively they will be thrown away (see red chart on diagram). In contrast, fine or light parts fall down earlier (see black chart on diagram). Therefore, we have a different refill performance, according on refill height and fuel quality.

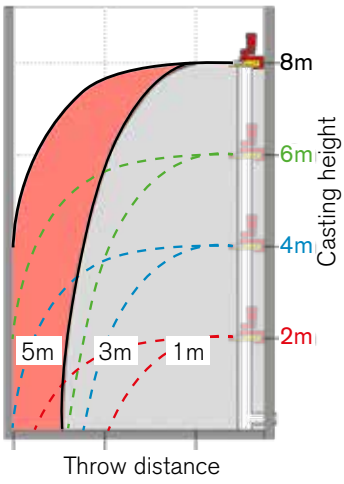

Filling System with Inside Ejector
The Wood Chips are being distributed into the storage with an inside ejector. A patented ejector helps to keep dust-low very low

Filling System with Outside Ejector
The vertical auger is mounted outside of the building. Ideal solution for Silos or low room heights. Distribution via a small slot.

Filling System with horizontal auger
A horizontal auger is filling the storage.
Especially needed for long storages or hardly-accessible storage rooms

Filling System with variable Inclination

Filling of the storage via a variable auger. Especially for high storages with roof-gable.

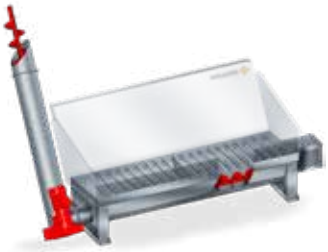

Befüllschnecken

Vertical filling system + variable inclination

The vertical outside filling system for Wood Chips, enables the convenient automatic refill of hardly-accessible rooms. The refill of the storage room takes place through a small opening (window or slot, min. 65cm width and 30cm height). The all new outside ejector is the best solution for situations, where a inside installation is not possible, e.g.: round silos or low room heights (no loss of space due to inside motor). The specially-designed outside ejector guarantees best Wood Chip distribution in the fuel storage - depending on ejector position, storage room design and Wood Chip quality. Output: up to 50m³/h The filling trough may be installed counter-sunk in the ground or alternatively with a cover frame and lid.

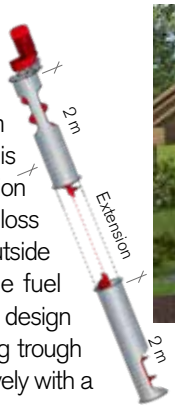

Horizontal filling auger

The horizontal filling auger for Wood Chips, enables the convenient automatic refill of hardly-accessible basement storage rooms. The specially-designed horizontal auger guarantees best Wood Chip distribution inside the fuel storage - depending on auger position, storage room design and Wood Chip quality. Output: up to 30 m³/h The auger may be extended up to 10m (incl. intermediate bearings).

Horizontal filling system with centrifugal plate

The horizontal filling system with a centrifugal plate for Wood Chips enables convenient automatic filling of "large" basement storage rooms that are difficult to access. The centrifugal plate guarantees an optimal distribution of Wood Chips in storage rooms up to 5x5 m and a high conveying capacity up to 50 m³/h, depending on the quality of the Wood Chips. The basic filling trough can be sunk into the ground, but can also be equipped with a cover.

ACCESSORIES

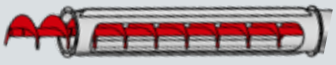
Horizontal Auger

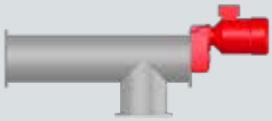
Angle drive unit

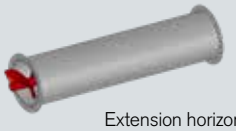

Extension horizontal and vertical

Mounting Clip

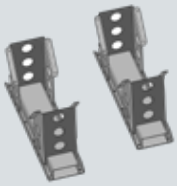
Fork lift console

Wheels 4 pcs.

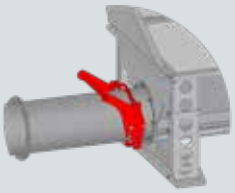
Quick-connect coupling

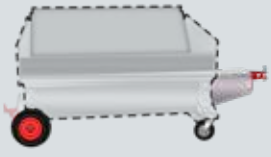
Assembly

Best combination of plant room and storage room

Containers are available in single, double or triple design, according to requirements. Because of the modular construction, our containers are easily positioned, assembled and installed. The main advantage is the enormous space and cost saving, either in new or refurbished buildings. Concrete containers are especially useful for public buildings, industrial enterprises, hotels or shared housing communities. Because of the comparatively low investment costs, Hargassner's containers are also perfectly suited for heat contracting businesses.

Single Floor Heating Module on a farm

Double Container next to a public building

Triple Container for catering company

Quadruple Container for an industrial company

Double Container

Space saving & cost efficient

Single Container

Container types:

Single Container

for 20 – 32 m³ wood-chips
for boilers 20 – 120 kW

- Single Houses
- Farms
- Small Industry

Double Container

for 60-80 m³ wood-chips
for boiler 70-200 kW

- Single Houses
- Hotels
- Industry
- Contracting

Multi Container

for 80-160 m³ wood-chips
for boilers 140 kW - 1 MW

- Single Houses
- Hotels
- Industry
- Contracting

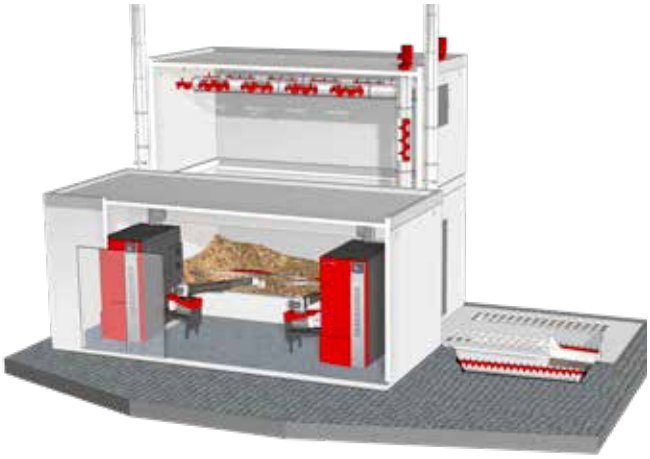

Technical data		CONTAINER						
Type	**Possibilities**	**BC 400**	**BC 500**	**BC 600**	**BC 700**	**BC 800**	**BC 900**	**DC 600**
Lenght	200 – 900 cm	400 cm	500 cm	600 cm	700 cm	800 cm	900 cm	600 cm
Width	280 – 348 cm	298 cm	298 cm	298 cm	298 cm	298 cm	298 cm	298 cm
Height outside	265 – 320 cm	265 cm	265 cm	265 cm	265 cm	265 cm	265 cm	540 cm
Height inside	228 – 283 cm	228 cm	228 cm	228 cm	228 cm	228 cm	228 cm	505 cm
Weight	9 – 35 t	ca. 15 t	ca. 20 t	ca. 25 t	ca. 28 t	ca. 32 t	ca. 35 t	ca. 24 t + ca. 16 t

Biggest ash-bin for maintenance intervall of up to one year!

Hargassner offers various ash-transportation systems into big ash-bins. Cleaning intervall is extened as well as comfort! For each application the perfect solution.

Ash-Transportation-System AFS (Eco-HK 20-330)

Ash-Transportation-System with flexible auger for transportation of ash into a 240-300 Liter ash-bin. Ash-bin can be installed on both sides next to the boiler (also with extension (max. 3m)

Ash-Suction-System AAS (Eco-HK 20-120)

For all who want to have the ash-bin outside of the boiler-room. Distance to the 300 Liter ash-bin can be up to 20m.

Ash Bin

Available with 240 Liter and 300 Liter.

Ash vacuum cleaner AC

The Hargassner ash vacuum cleaner AC consists of an industrial vacuum unit with a 300 l ash bin with wheels and is used for easy disposal of ash from the ash box or boiler. The filter inside the unit can be cleaned by semi-automatic cleaning when the suction power is reduced. Important: The vacuum cleaner requires protection against the weather when installed outdoor!

Niro-Fluepipes ø 150mm (Eco-HK 20-60)

Hargassner offeres special Niro-Flue Pipes for all wood-chip boilers up to 60kW. In the connection-pipe set 150 mm all necessary components like elbow, collar, etc. are included. 2 different applications - with integrated explosion flap or explosion flap in the existing chimney on site.

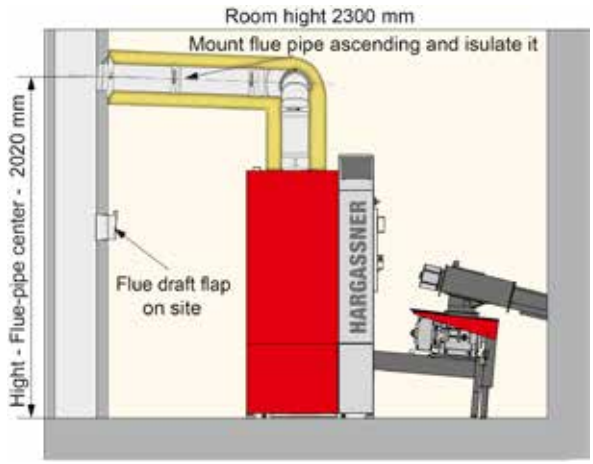

Integrated back-end protection

Available as accessory. With energy-efficient pump and mixer!

- fast and simple installation
- compact and cost-efficient
- Pre-wird for fast assembling

Accumulator P, SP, HSP or Solar SW 1+2 from 500 to 4000 Liter

Perfect fitting in all details for Hargassner control & hydraulic schemes. A special feature is the return spread sheet, that enables most efficient accumulator utilization. An integrated sensor strip guarantees a boiler-depending and exact positioning of the sensor to optimise all control processes.
All Hargassner accumulators are equiped with 2 x 90° separated connection strips with each 4 connection sleeves and can be used parallel easily. Furthermore, we offer a 45° mounting position - means the accumulators can be positioned next to each other - lowest space requirements. We offer a high quality fleece insulation (free of FCKW) with 100 mm / 120 mm and a stable grey hard cover.

Energy class
C

- Return spread sheet for efficient accumulator utilization
- Sensor strip for easy and flexible installation
- Insulation, Hard Cover, Sleeve Insulation
- Small, compact design

NEW: Accumulator P
without return-flow spread sheet

Accumulator P | Accumulator Tank SP | Hygienic Accumulator HSP | Solar-layered Accumulator SP SW 1+2 | Solar Hygienic Accumulators HSP SW 1 +2

Substation, Heatmeter Freshwaterstations and Heatcircuitgroups

Hargassner offers hydraulic components specially designed for the boilers. All control functions are performed by the Hargassner controls on the boiler.

Further details can be found in the „Accessories“ brochure or at www.hargassner.at

Hot water tank WS 300 & 500 & Solar tank WS 300-S & 500-S

The Hargassner Hot Water Stroages WS 300 and WS 500 have perfectly dimensioned heat exchanger surfaces and are specially designed for the combination with Hargassner biomass boilers. The hot water solar storage WS 300-S and WS 500-S are equipped with an additional smooth pipe heat exchanger for solar.

- enamelled steel
- incl. Magnesium protection anode
- Cleaning Flange DN 110 for ribbed pipe heat exchanger or immersion heater
- additional sleeve 6/4“ for a threaded electric immersion heater

Energy class
C

Cross section
Hot water solarstorage
WS 300.2 + 500.2

TECHNICAL DATA

Eco-HK 20 – 60

Efficiency Class

A+

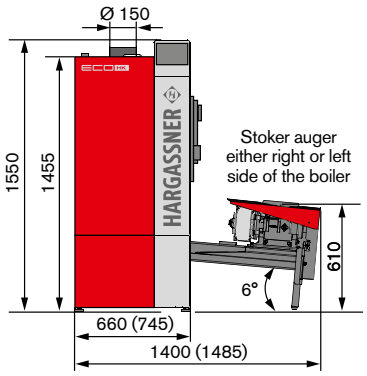

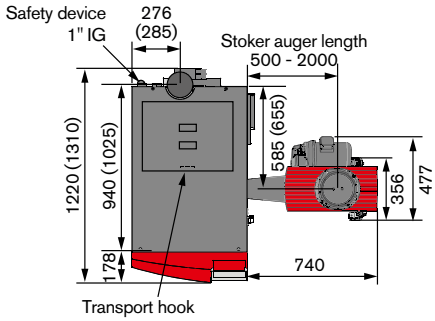

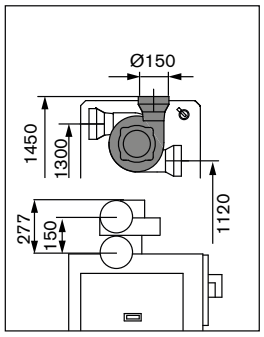

Numbers in brackets for Eco-HK 40-60

Eco-HK 70 – 120

Efficiency Class

A+

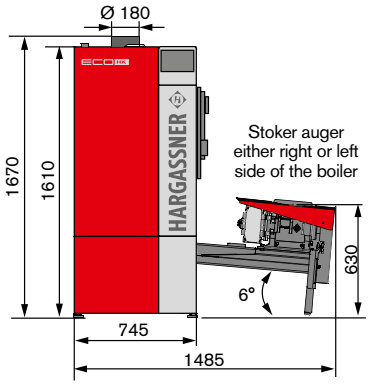

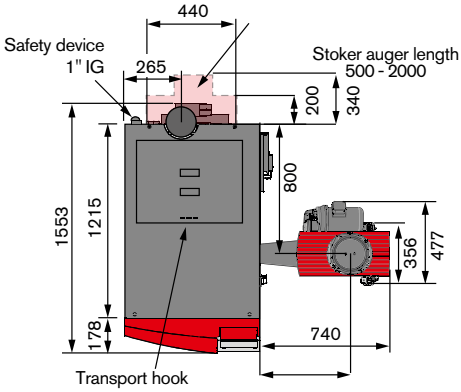

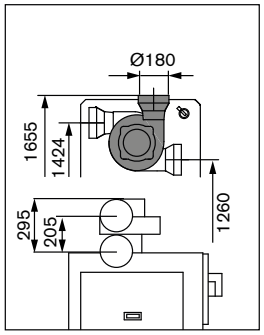

Eco-HK 130 – 220

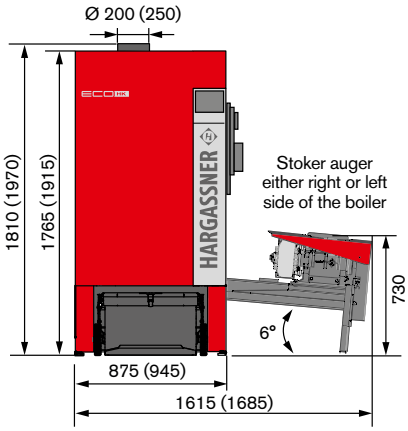

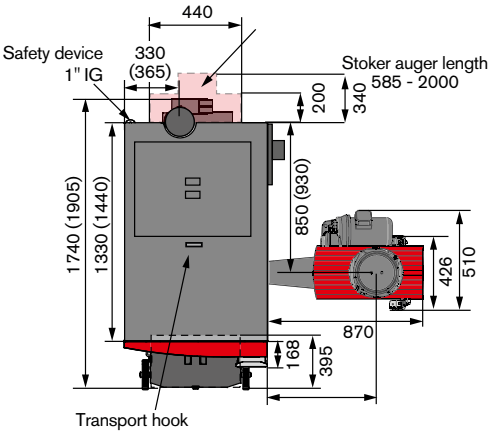

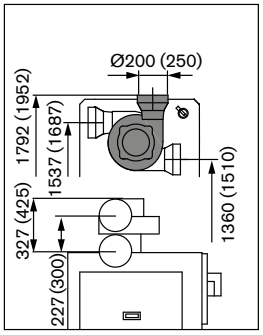

Numbers in brackets for Eco-HK 200

Eco-HK 250 – 330

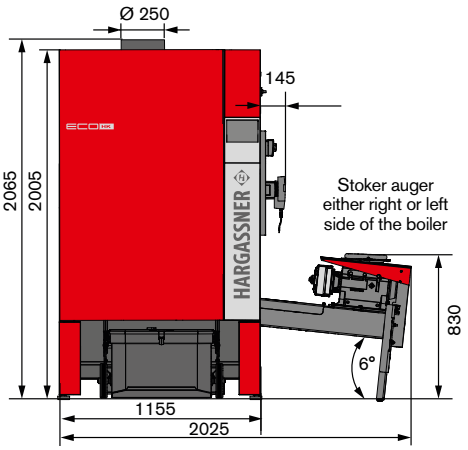

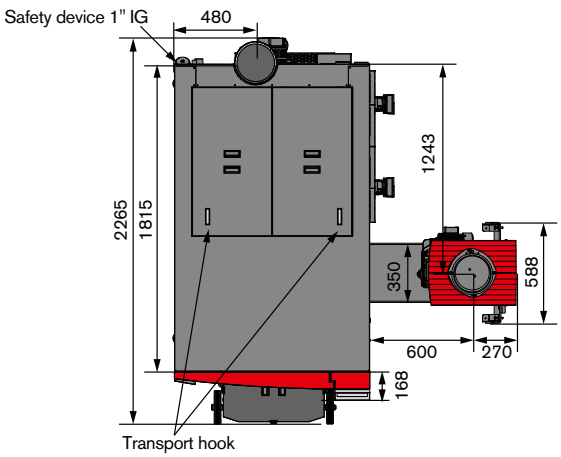

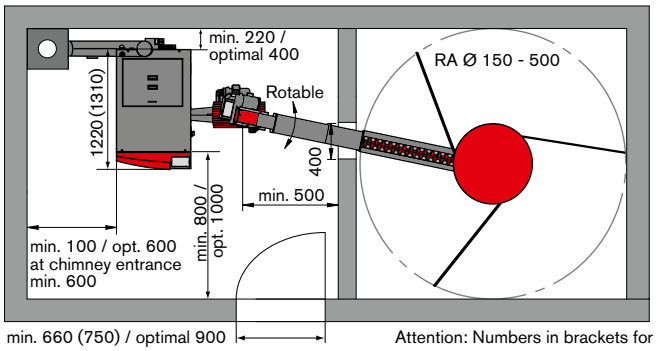

min. 660 (750) / optimal 900

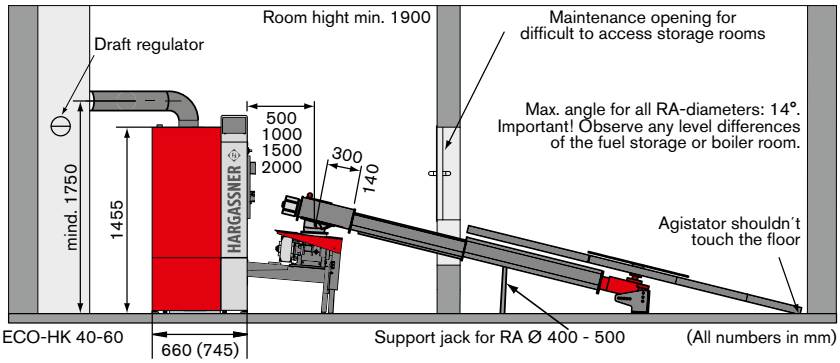

Attention: Numbers in brackets for ECO-HK 40-60

Support jack for RA Ø 400 - 500

(All numbers in mm)

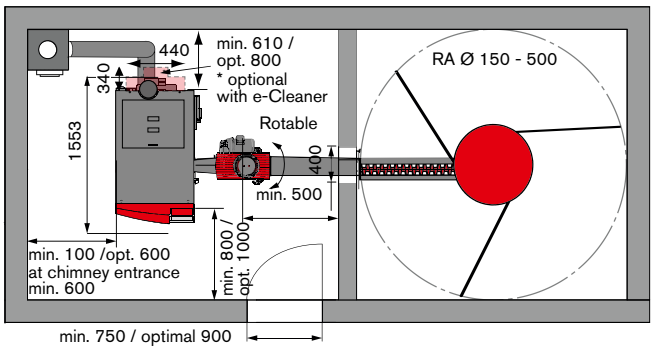

min. 750 / optimal 900

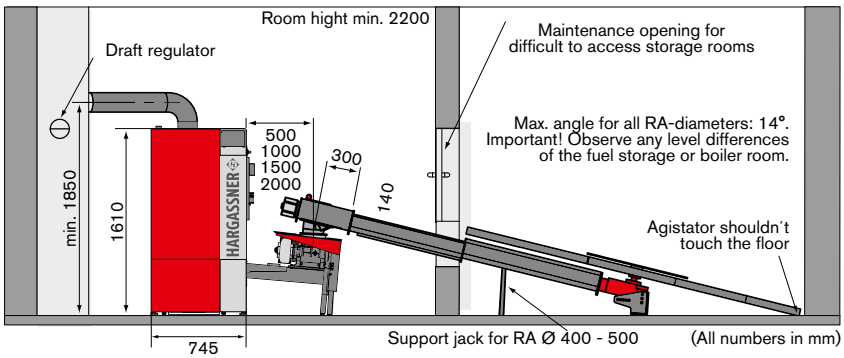

Support jack for RA Ø 400 - 500

(All numbers in mm)

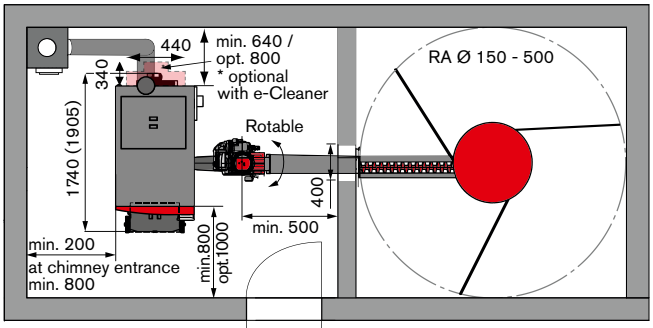

min. 900 / optimal 1000

Attention: Numbers in brackets for Eco-HK 200

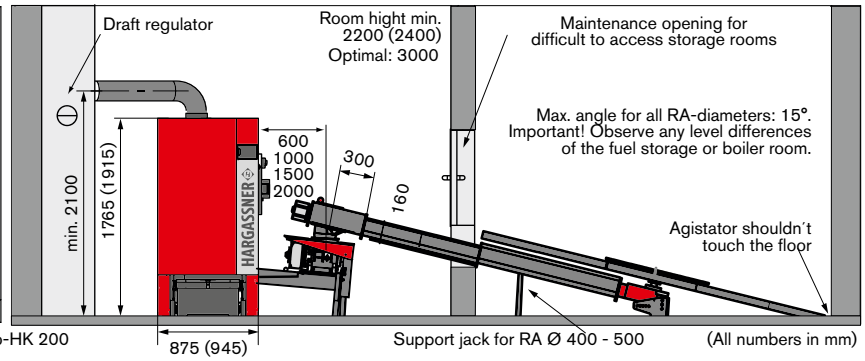

Support jack for RA Ø 400 - 500

(All numbers in mm)

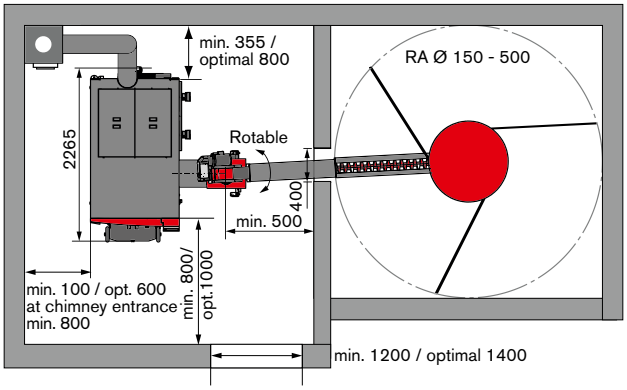

min. 1200 / optimal 1400

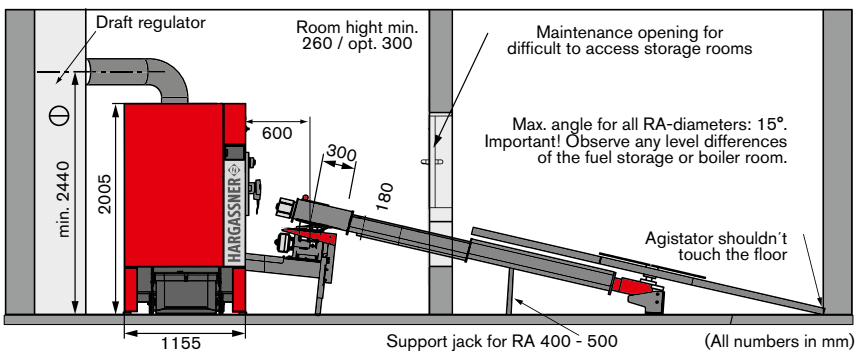

Support jack for RA Ø 400 - 500

(All numbers in mm)

TECHNICAL DATA

Eco-HK 20 – 60 kW							
	Unit	Eco-HK 20	Eco-HK 30	Eco-HK 35	Eco-HK 40	Eco-HK 50	Eco-HK 60
Power range	kW	6-20	9-32	10-35	12-40	12-49	18-60
Efficienca (at nominal heat output)	%	93,9 / 91,4	94,4 / 93,2	94,6 / 94,1	94,8 / 95	95,3 / 95	95,8-95
Nominal heat output	kW	21	34	37	42	52	63
Flue pipe diameter	mm	150	150	150	150	150	150
Amount of water in heat exchanger	Liter	100	100	100	142	142	142
Water side resistance ΔT 10 [K]	mbar	23	50	67	81	119	174
Water side resistance ΔT 20 [K]	mbar	6	13	18	21	31	46
Flow / return flow	inch	5/4 IG	5/4 IG	5/4 IG	5/4 IG	5/4 IG	5/4 IG
Weight (incl. Accessories)	kg	690	690	690	810	810	810
Boiler heigth H x W x D	mm	1455 x 660 x 940			1455 x 745 x 1025		
Tranporting dimensions H x W x D	mm	1510 x 660 x 1025			1510 x 745 x 1110		
Boiler-Label	Class	A+	A+	A+	A+	A+	A+
Boiler inspection label	Class	A+	A+	A++	A++	A++	A++

max. operating temperature 95° C, max. operating pressure 3 bar, boiler temperature range 69–78 °C, back end protection 58 °C, electrical supply 400V AC, 50 Hz, 13 A

Eco-HK 70 – 120 kW						
	Unit	Eco-HK 70	Eco-HK 90	Eco-HK 100	Eco-HK 110	Eco-HK 120
Power range	kW	21-70	27-90	30-99	33-110	36-120
Efficienca (at nominal heat output)	%	95,6 / 95,3	95,2 / 96	95 / 96,3	94,7 / 96,7	94,5 / 97
Nominal heat output	kW	73	94	104	116	127
Flue pipe diameter	mm	180	180	180	180	180
Amount of water in heat exchanger	Liter	180	180	180	180	180
Water side resistance ΔT 10 [K]	mbar	n.g.	n.g.	n.g.	n.g.	n.g.
Water side resistance ΔT 20 [K]	mbar	n.g.	n.g.	n.g.	n.g.	n.g.
Flow / return flow	inch	6/4 IG	6/4 IG	6/4 IG	6/4 IG	6/4 IG
Weight (incl. Accessories)	kg	1100	1100	1150	1150	1150
Boiler heigth H x W x D	H mm	1610 x 745 x 1235				
Tranporting dimensions H x W x D	mm	1670 x 745 x 1335				
Boiler-Label	Class	A+	-	-	-	-
Boiler inspection label	Class	A++	-	-	-	-

max. operating temperature 95° C, max. operating pressure 3 bar, boiler temperature range 69–78 °C, back end protection 58 °C, electrical supply 400V AC, 50 Hz, 13 A

Eco-HK 130 – 230						
	Unit	Eco-HK 130	Eco-HK 150	Eco-HK 170	Eco-HK 200	Eco-HK 220
Power range	kW	39-130	44-149	49-166	59-199	59-216
Efficienca (at nominal heat output)	%	93,5 / 95,7	93,4 / 93,1	94,2 / 93,7	94,4 / 97,4	94,6 / 97,3
Nominal heat output	kW	138,7	159,5	176,2	213,7	228,3
Flue pipe diameter	mm	200			250	
Amount of water in heat exchanger	Liter	253			360	
Water side resistance ΔT 10 [K]	mbar	160	184,6	209,21	227	250
Water side resistance ΔT 20 [K]	mbar	42,7	49,0	55,5	63	69
Flow / return flow	inch	2“ / 2“			2,5" / 2,5"	
Weight (incl. Accessories)	kg	1450	1450	1450	1600	1600
Boiler heigth H x W x D	mm	1765 x 875 x 1740			1915 x 945 x 1905	
Tranporting dimensions H x W x D	mm	1810 x 875 x 1435			1970 x 945 x 1595	

max. operating temperature 95° C, max. operating pressure 3 bar, boiler temperature range 69–78 °C, back end protection 58 °C, electrical supply 400V AC, 50 Hz, 13 A

Eco-HK 250 – 330				
	Einheit	Eco-HK 250	Eco-HK 300	Eco-HK 330
Power range	kW	75-250	90-300	99-330
Efficienca (at nominal heat output)	%	ca. 93 %	ca. 93 %	ca. 93 %
Nominal heat output	kW	267	320	352
Flue pipe diameter	mm	250	250	250
Amount of water in heat exchanger	Liter	570	570	570
Water side resistance ΔT 10 [K]	mbar	-	-	-
Water side resistance ΔT 20 [K]	mbar	-	-	-
Flow / return flow	inch	2,5"	2,5"	2,5"
Weight (incl. Accessories)	kg	2500	2500	2500
Boiler heigth H x W x D	mm	2005 x 1155 x 2138		
Tranporting dimensions H x W x D	mm	2065 x 1150 x 1970		

max. operating temperature 95° C, max. operating pressure 3 bar, boiler temperature range 69–78 °C, back end protection 58 °C, electrical supply 400V AC, 50 Hz, 13 A

P		P 825	P 1000	P 1500
	Unit			
Accumulator Volume	Litre	825	1000	1500
Diameter Ø without insulation	mm	750	790	990
Diameter Ø with insulation	mm	950	990	1230
Height without insulation	mm	1910	2020	2090
Height with insulation	mm	2000	2110	2180
Tilt dimension without insulation	mm	1920	2030	2104
Port 8 pcs. IT	Inches	6/4“	6/4“	6/4“ (2“)
Weight P (without insulation)	kg	105	116	164

Max. operating pressure 3 bar, max. temperature 95°C Hargassner accumulator tanks are only available in combination with a Hargassner biomass boiler! Individual delivery on request.

SP + SP SW 1+2		SP 350	SP 500	SP 650	SP 825	SP 1000	SP 1200	SP 1500	SP 2000	SP 2200	SP 2600	SP 3000	SP 4000	SP 5000
	Unit													
Accumulator Volume	Litre	395	500	650	825	1000	1200	1500	2000	2200	2600	3000	4000	5000
Diameter Ø without insulation	mm	650	650	750	750	790	990	990	1100	1100	1250	1250	1600	1600
Diameter Ø with insulation	mm	850	850	950	950	990	1230	1230	1340	1340	1490	1490	1840	1840
Height without insulation	mm	1380	1630	1660	1910	2020	1740	2090	2250	2550	2320	2620	2250	2760
Height with insulation	mm	1470	1720	1750	2000	2110	1830	2180	2340	2640	2410	2730	2340	2895
Tilt dimension without insulation	mm	1392	1650	1670	1920	2030	1758	2104	2268	2565	2411	2690	2460	2900
Port 8 pcs. IT	Inches	4 x 6/4"	6/4"	6/4"	6/4"	6/4"	6/4"	6/4" (2")	6/4" (2")	8x2 1/2"	10 x 2"	10 x 2"	10 x 2"	10 x 2"
Weight SP (without insulation)	kg	67	78	92	105	116	141	164	241	228	288	352	437	576
Weight SW1 (without insulation)	kg	-	-	-	130	160	-	207	292	-	-	-	-	-
Solar heat exchanger bottom SW1 1" IT	m^2	-	-	-	2	3	-	3	4	-	-	-	-	-
Weight SW2 (without insulation)	kg	-	-	-	154	185	-	252	343	-	-	-	-	-
Solar heat exchanger top/bottom SW2 1" IT	m^2	-	-	-	2/2	2/3	-	3/3	4/4	-	-	-	-	-

Max. operating pressure 3 bar, max. temperature 95°C Hargassner accumulator tanks are only available in combination with a Hargassner biomass boiler! Individual delivery on request.

HSP + HSP SW 1+2		HSP 500	HSP 650	HSP 825	HSP 1000	HSP 1200	HSP 1500	HSP 2000
	Unit							
Accumulator Volume	Litre	500	650	825	1000	1200	1500	2000
Diameter Ø without insulation	mm	650	750	750	790	990	990	1100
Diameter Ø with insulation	mm	850	950	950	990	1230	1230	1340
Height without insulation	mm	1630	1660	1910	2020	1740	2090	2250
Height with insulation	mm	1720	1750	2000	2110	1830	2180	2340
Tilt dimension without insulation	mm	1650	1670	1920	2030	1760	2110	2270
Port 8 pcs. IT	Inches	6/4“	6/4“	6/4“	6/4“	6/4“	6/4“	6/4“
Stainless steel corrugated pipe - water content	Litre	23	23	37	37	37	45	45
Stainless steel corrugated pipe 5/4" AG heating surface	m^2	4,1	4,1	6,7	6,7	6,7	8,2	8,2
Weight HSP (without insulation)	kg	103	117	133	144	169	195	272
Weight SW1 (without insulation)	kg	119	141	157	188	256	-	-
Solar heat exchanger bottom SW1 1" IT	m^2	2	2	2	3	-	-	-
Weight SW2 (without insulation)	kg	-	-	182	213	-	284	-
Solar heat exchanger top/bottom SW2 1" IT	m^2	-	-	2/2	2/3	-	3/3	-

Max. operating pressure 3 bar, max. temperature 95°C Hargassner accumulator tanks are only available in combination with a Hargassner biomass boiler! Individual delivery on request.

HARGASSNER
BIOMASS HEATING TECHNOLOGY

Your expert for **PELLET- | WOOD LOG- | WOOD CHIP-**HEATING

Hargassner product range:

Pellet Boilers, Wood Chip Boilers, Wood Log Boilers, Combi Boilers, Accumulators, Industrial Boilers 130-330 kW, Heating modules, Filling Auger, Heat & Power from wood KWK, Hot Air heating module Powerbox & Hydraulic Accessories

AUSTRIA

HARGASSNER Ges mbH
Anton Hargassner Strasse 1
A-4952 Weng
Tel. +43 (0) 77 23 / 52 74
Fax +43 (0) 77 23 / 52 74 - 5
office@hargassner.at
www.hargassner.com

GERMANY

HARGASSNER DE GmbH
Heraklithstraße 10a
D-84359 Simbach/Inn
Tel. +43 (0) 77 23 / 52 74
Fax +43 (0) 77 23 / 52 74 - 5

Your local dealer:

Hargassner worldwide

- North America
- South America
- Japan
- New Zealand
- Australia

and more...

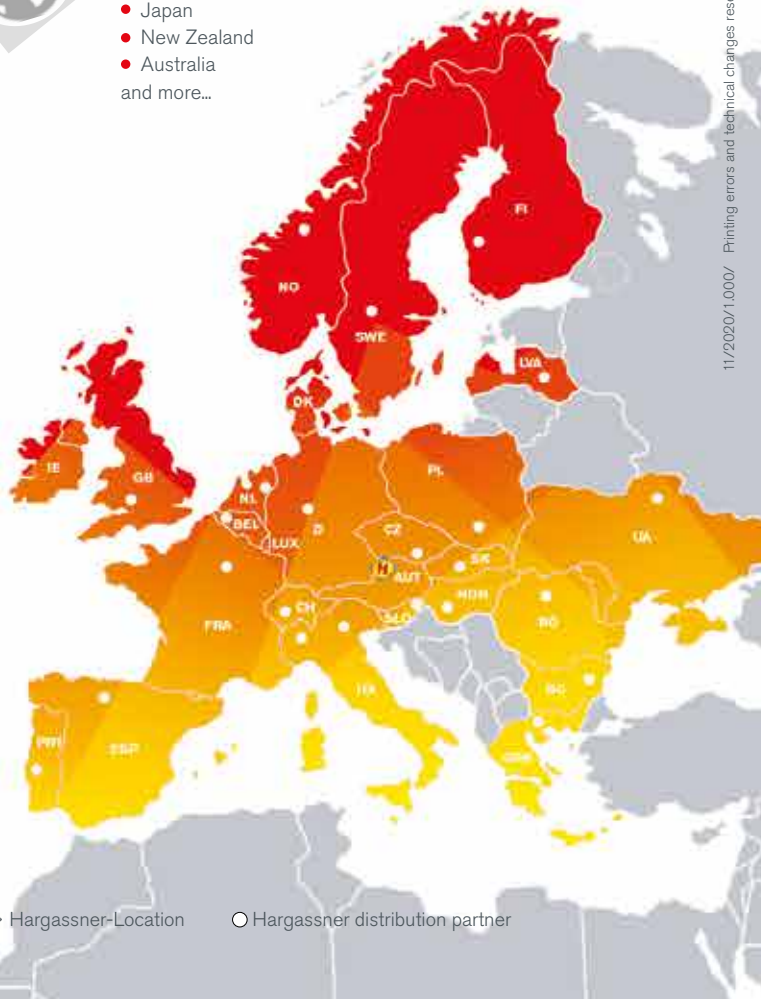

11/2020/1.000/ Printing errors and technical changes reserved